EBAX®

1 Piece RANGE

ELISA BIG

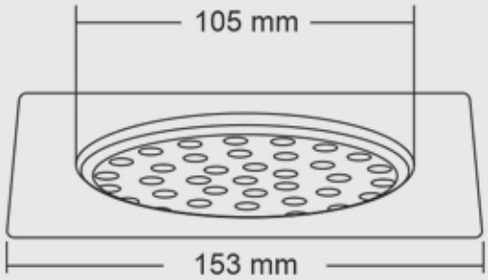

Overall Size : 153x153 mm (6x6 Inch)

ELISA SMALL

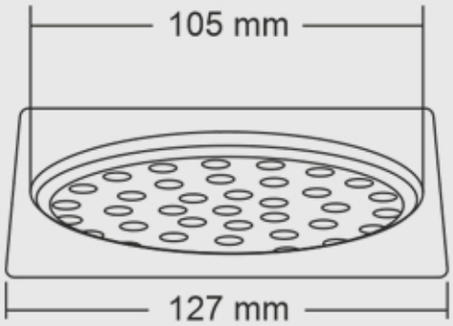

Overall Size : 127x127 mm (5x5 Inch)

ELISA MINI

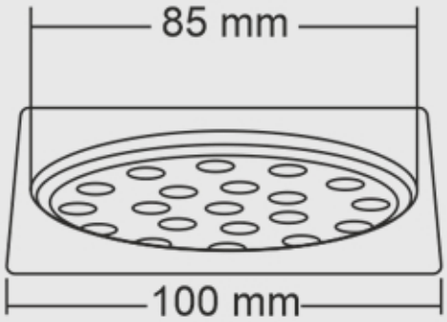

Overall Size : 100x100 mm (3.93x3.93 Inch)

Finishes

Glossy ☑	Satin ☑